JEEP LIBERTY

Fuel Tank Skid Plate

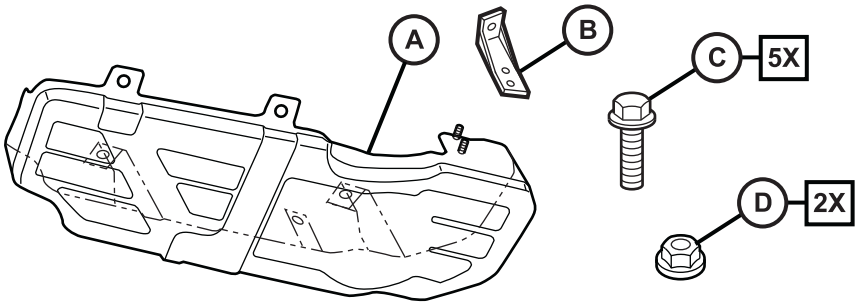

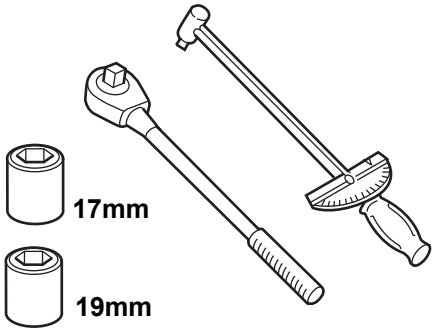

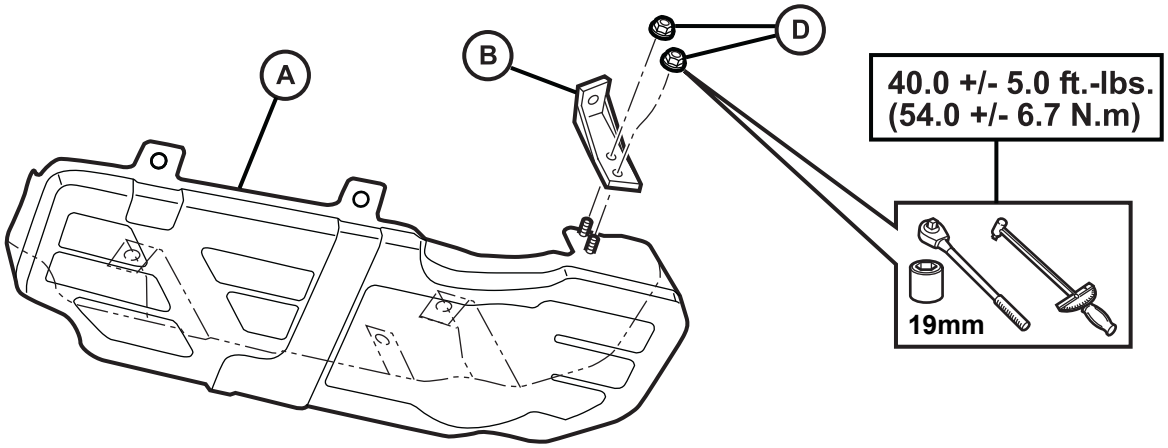

1

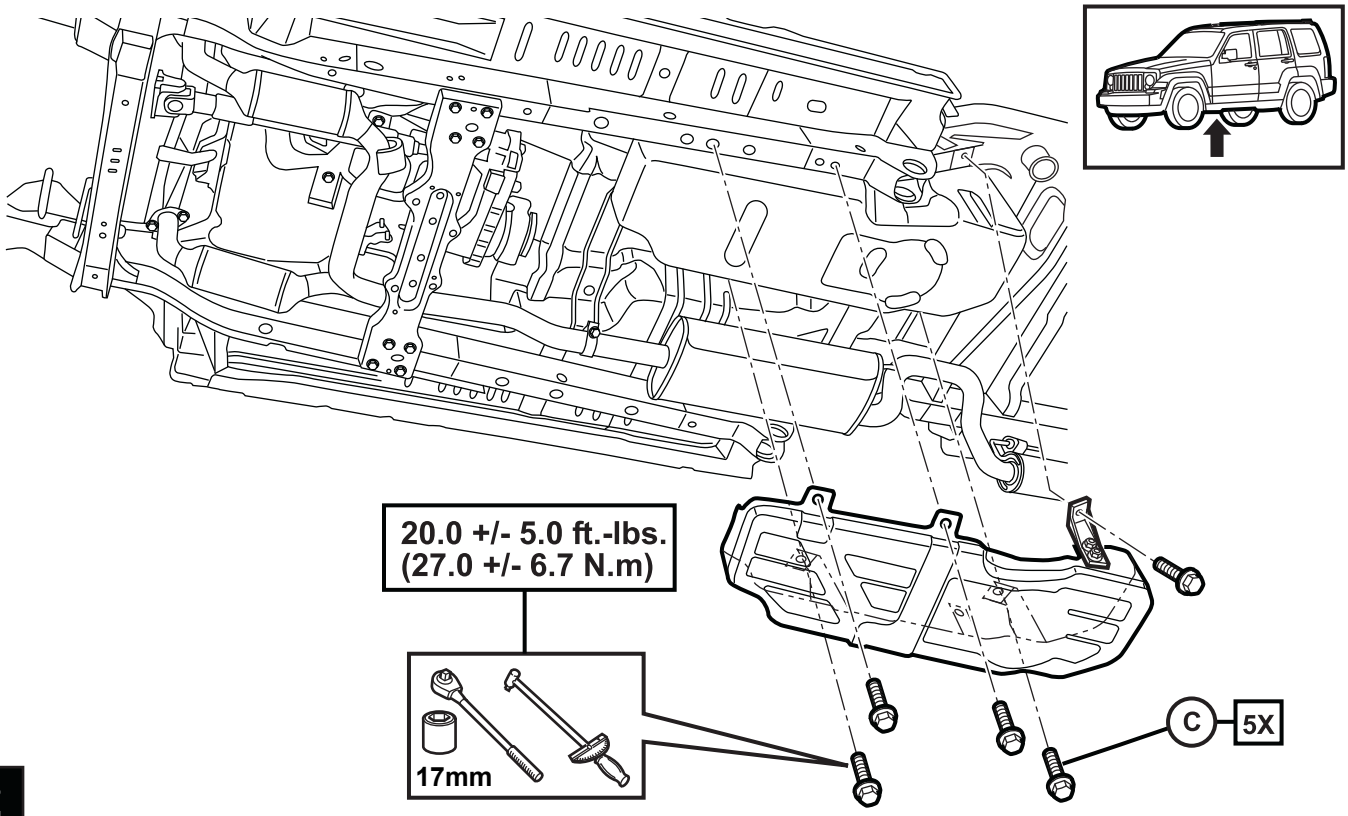

2